SCARA Type Soldering Robot

UNIX-464

MOVESTAR Series

SCARA-type soldering robot with an integrated tip position correction mechanism. This allows you to reduce tact time and helps to maintain and achieve accuracy and reliability on your production line.

Standard configuration

① Soldering robot main unit (UNIX-464)
② 3-axis tip position correction mechanism (UCS-410SZ) (optional)
③ Soldering controller (UP-06)
④ Robot controller (CR1-JU-04)
⑤ Vacuum unit (UJC-214VE)
⑥ Cleaner unit (UJC-214C)
⑦ Teaching box (R28TB-JU-04)
⑧ Soldering head (UMC-087)
⑨ Solder feeding device (UPM-026)
⑩ Solder feeding tube set (PTシリーズ)

Features

High speed motion driven with AC servo-motors and rigid construction !

The use of AC servo-motors cuts down tact time by increasing motion speed up to a maximum of 7,128mm/second. The rigid construction of the soldering iron-robot arm assembly enables accurate and repeatable soldering in the production line.

3-axis soldering tip position correcting function added !

A soldering tip position may be shifted when it is consumed or expanded due to heat or when a soldering tip or a heater is replaced. It takes approximately one hour for a conventional model to correct the soldering tip position shifted in such a case with a teaching operation or other one, but this robot requires only several minutes to correct the soldering tip position automatically and completely. The high-precision sensor dedicated for correction of the soldering tip position is used (the sensor section is optional), and the 3-axis (X, Y and Z) correction system is used.

Simple programming without complicated robot language !

Since the program dedicated for soldering is built into the robot, you do not have to create any high level program. You can enter numeric values from the teaching box as the soldering conditions directly also, and this shortens the teaching time greatly.

Applications

Soldering of an electronic parts or post-fixing parts / Soldering on inclined circuit boards / Soldering of complicated points/ Soldering of minute parts

Specifications

Robot main unit UNIX−464

Installation posture		Installed on the floor
Motion flexibility		4
Structure		Horizontal, multiple-joint type
Drive system		AC servo motor
Position detection method		Absolute encoder
Arm length	NO1 arm	225mm
	NO2 arm	225mm
Max.reach radius		450mm
Operating range	J1	254 deg (±127)
	J2	290 deg (±145)
	J3(Z)	200 mm (Zstroke97~297)
	J4(θ)	720 deg (±360)
Maximum speed	J1	375 deg/sec
	J2	612 deg/sec
	J3(Z)	1, 177 mm/sec
	J4(θ)	2, 411 deg/sec
Maximum resultant speed(*1)		7, 128(5, 349) mm/sec
Allowable moment load		0. 04(0. 01)kg·m²
Positioning repeat accuracy		X-Y resultant±0.02mm/J3(Z)±0.01mm/J4(θ)±0.02deg
Ambient temparature		0~40 ℃
Air pressure		0. 5MPa±10%
Soldering head		UMC−087 Heater capacity:200W
Solder feeding device		UPM−026 Solder diameter:0. 5φ~1. 0φ (The diameter can be specified within the regulated range)
Weight of the main unit		Approximately 22Kg

(*1) It is the resultant value of J1, J2 & J4. The figure in parenthesis is the resultant value of J1 & J2.

Dimensions (unit: mm)

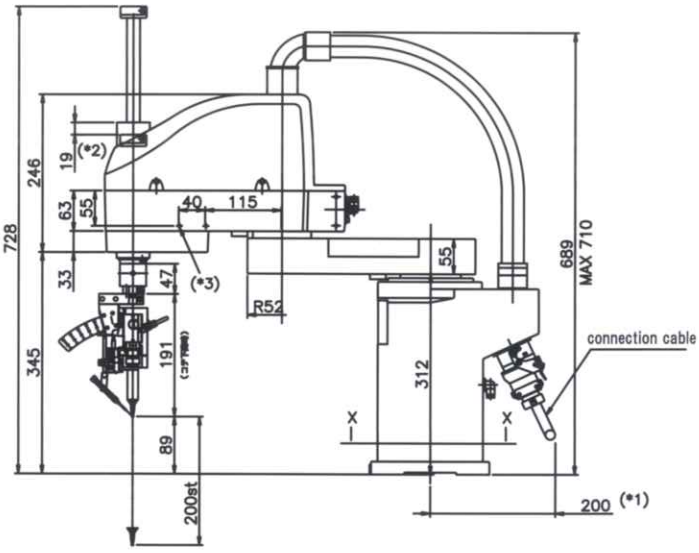

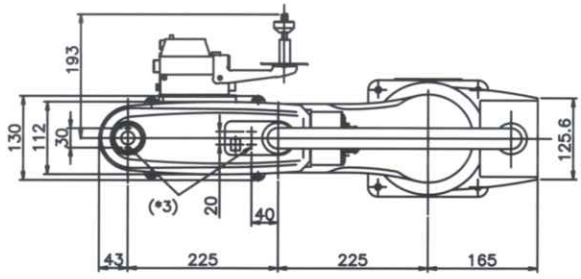

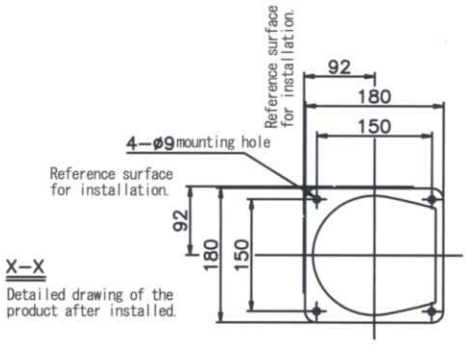

1. *1 indicates the space required to connect the cables.
2. *2 indicates the dimension from the inlet for NO2 arm cover to the upper edge of mechanical stopper of axis J3.
3. *3 indicates the screw hole (M4) for fixing your wiring.

※ The dimensions will change when you install a head and/or an option onto the product.

Specifications

Robot controller CR1-JU-04

Path control method		PTP control and CP control
Number of axes to be controlled		Up to four at the same time
CPU		64bit RISC/DSP
Programming language		Macro step editing/MELFA-BASIC
Position display method		Teaching method and MDI method
Number of programs		88 programs
Number of macro steps to be registered		Approximately up to 3,000 steps/ 88 programs
		Approximately 28,000 steps per program
Soldering path type		40 types
External I/O	General purpose I/O	Input 32 points Output 32 points
	Dedicated I/O	Allocated to the general purpose I/O (one point "STOP" is fixed.)
	Emergency stop I/O	One point each
	Door switch input	One point
Interface	RS-232C	3 ports (To be connected to a device such as a PC and a solder controller)
	RS-422	1 port (Dedicated for a teaching box)
Ambient temperature		0~40℃
Ambient humidity		45~85%RH
Power supply voltage range		Single-phase 180 to 253 V AC
Power capacity		1.0KVA
Dimensions (including feet)		300(W)×290(D)×165(H)
Weight of the main unit		Approximately 12 Kg
Structure		Completely self-contained floor-type open structure
Ground		100 Ω or less (Class D grounding)

Soldering controller UP-06

Number of soldering conditions	63 conditions
Soldering tip control range	450℃ (MAX)
Heater alarm value	-100~ +100℃(variable)
Heater power	200W cross heater
Solder feeding control	Controlled by a stepping motor
Warning displays	Solder shortage, solder clogged, and heater alarms
Ambient temperature	0~40℃
Ambient humidity	45~85%RH
Power supply voltage range	Single-phase 90 ~110 V AC
Power capacity	350W
Dimensions (including feet)	212(W)×290(D)×59(H)
Weight	Approximately 2.5 Kg

JAPAN UNIX

Head office:2-21-25, Akasaka, Minato-ku, Tokyo 107-0052
TEL:+81-3-3588-0551 FAX:+81-3-3588-0554

http://www.japanunix.co.jp

- Descriptions in this catalog are valid as of January 2008. Specifications and appearance of the product are subject to change without any prior notice.
- Before using this product, be sure to read the supplied Operating Instructions thoroughly.

Printed in Japan 08013000Y